EDGE-O-DOCKLEVELER - PP-3072

APPROX WEIGHT: 697.68 lbs.
DOES NOT INCLUDE WEIGHT OF POWER OR PACKAGING!!!

*** ANY ADDITIONS, DELETIONS, OR OMISSIONS MUST BE CORRECTED ON THIS DRAWING AS THIS DRAWING WILL BE CONSIDERED ALL INCLUSIVE ***
ALL GRAPHICS PROVIDED ARE FOR REFERENCE ONLY. IF CERTAIN DIMENSIONS ARE CRITICAL PLEASE VERIFY THOSE DIMENSIONS WITH YOUR SALESPERSON

HAND PUMP NOT SHOWN IN FRONT OR RIGHT VIEW

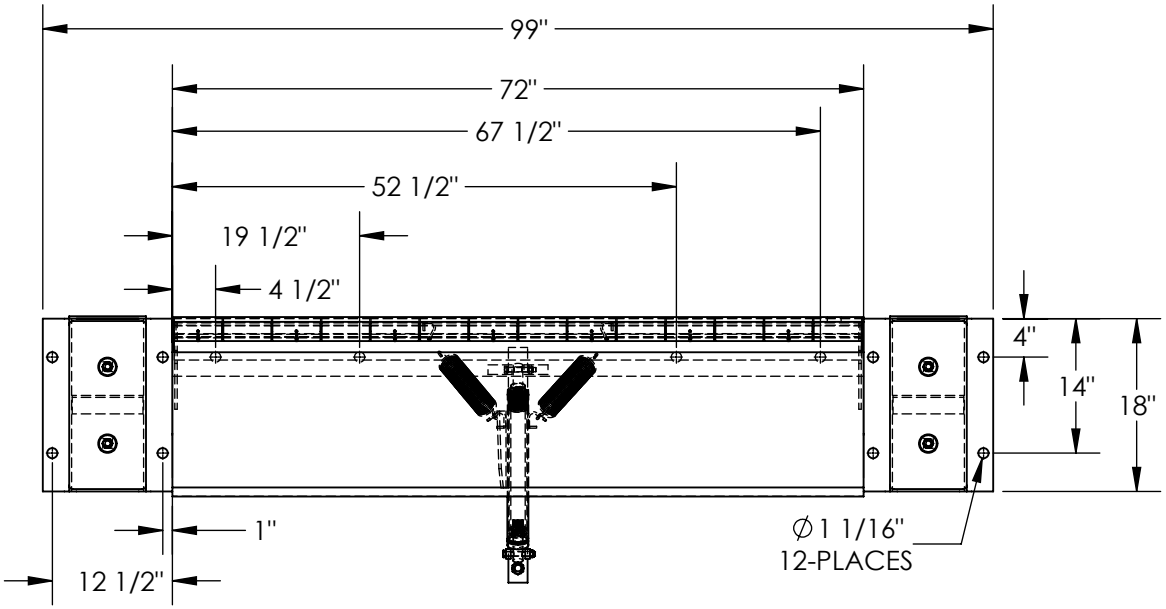

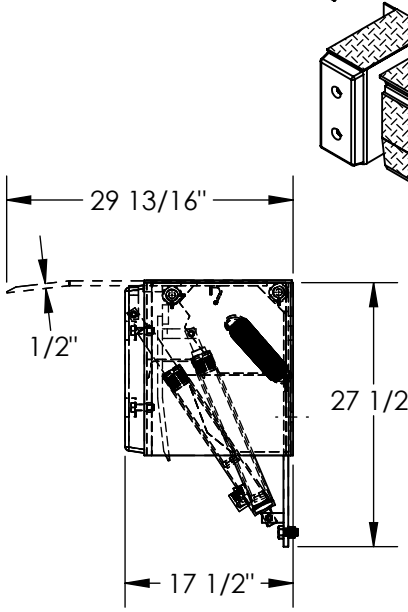

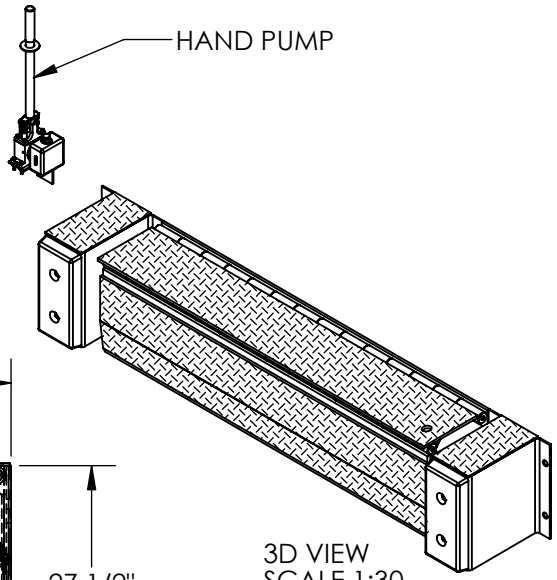

STANDARD FEATURES

MODEL NUMBER IS PP-3072
OVERALL WIDTH IS 99"
DECK WIDTH IS 72"
OVERALL DEPTH WITH RAMP OUT IS 29 13/16"
BUMPER PROJECTION IS 17 1/2"
UNIFORM CAPACITY IS 30,000 LBS.
5" ABOVE / 5" BELOW SERVICE RANGE
HYDRAULIC HAND PUMP OPERATION
RECOMMENDED FOR DOCKS AT LEAST 48" HIGH.
INCLUDES HAND PUMP, WALL-MOUNT BRACKET, CYLINDER, HYDRAULIC LINES AND OIL.
TREADPLATE RAMP & DECK CONSTRUCTION
DURABLE LIQUID PAINT BROWN FINISH

SPECIAL FEATURES

NONE

DIMENSION TOLERANCE ± 1/4"

APPROVAL

I, THE UNDERSIGNED, AGREE THAT THE PRODUCT AS REPRESENTED SATISFIES DESIGN AND DIMENSION REQUIREMENTS. I ALSO ACKNOWLEDGE MY DUTY TO CONFIRM PRODUCT AND INSTALLATION COMPLIANCE WITH ALL APPLICABLE FEDERAL, STATE AND LOCAL REGULATIONS AND STANDARDS.

UNITS REQUIRING APPROVAL DRAWINGS OR MODIFIED ARE NON-RETURNABLE

[ ] As drawn [ ] As marked

Signed:_____ Date:_____

Printed Name:_____

LEAD TIME WILL START UPON RECEIPT OF SIGNED APPROVAL DRAWING

DISTRIBUTOR'S NAME: HOF Equipment Company		P.O.# X
		W.O.# X
DRAWN BY: M.WILSON	DATE: 12/19/2012	SALES: X
REFERENCE: X	SCALE: 1:20	FILE NAME: 06-007-003
QUOTED LEAD TIME: X	QUOTE # X	